HYDRA-TECH PUMPS, INC

PORTABLE HYDRAULIC POWER UNIT

MODEL HT7DXR

This diesel power unit features an extended run fuel tank, extra oil cooling and easy handling. Great for continuous duty applications powering our pumps or other hydraulic equipment.

FEATURES

- Efficient Yanmar Diesel Engine
- Recoil and Electric Start
- Variable Speed
- Single Point Lifting Bracket
- Roll Cage Frame
- Large Fuel Tank
- Gear Type Hydraulic Pump
- Pressure Control Valve
- System Relief Valve
- Liquid Filled Pressure Gauge
- Spin-On 10 Micron Return Filter
- Efficient High Capacity Oil Cooler
- Fluid Level Gauge
- For Flows and Pressures Other Than Standard, Consult Factory

A0701

HYDRA-TECH PUMPS, INC P.O. Box 537, Mt. Holly, NJ 08060, USA ● Phone: 609-267-5393 FAX: 609-261-8070

Model HT7DXR Overall Dimensions

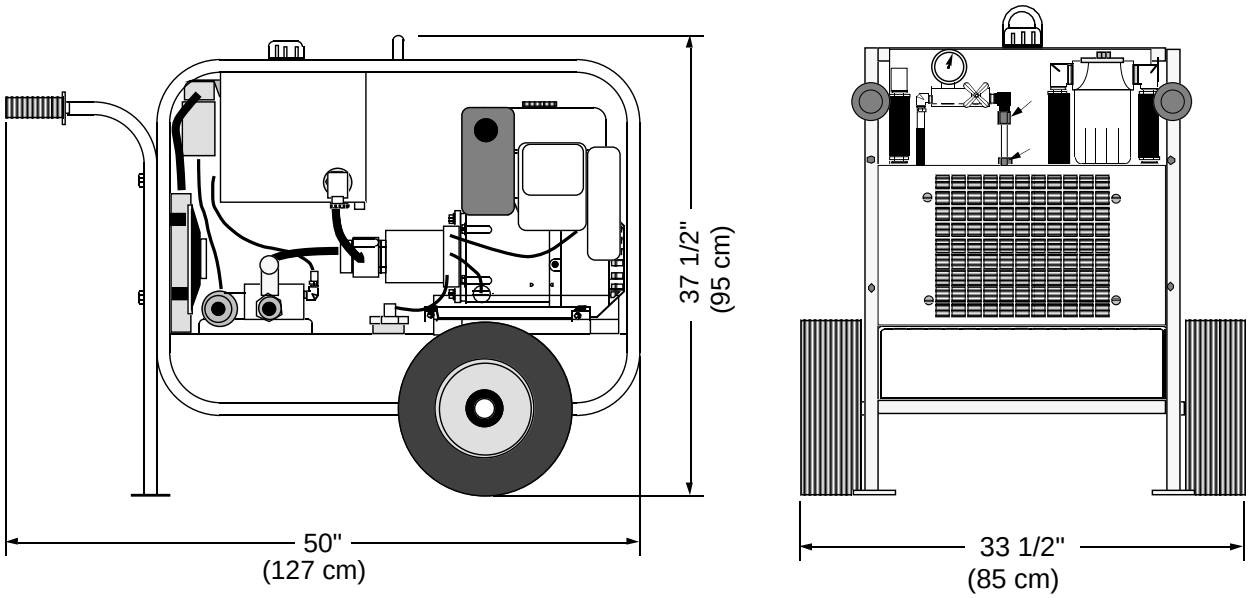

SPECIFICATIONS

ENGINE:.....Yanmar L70EE Diesel
HORSE POWER (KW):..... 6.7 (5.0)@ 3500 RPM
HYDRAULIC OUTPUT:.....Variable, Max 4.5 GPM (17 LPM)
OPERATING PRESSURE:.....Maximum 1800 PSI (122 Bar)
HOSE PORT SIZE:.....1/2" NPT
HYDRAULIC OIL:.....SAE 10W or 20W Type AW
also:. Dexron ATF or Bio-degradeable oil (Consult Factory)
OIL FILTRATION:.....10 Micron (Standard)
OIL RESERVOIR CAPACITY:.....8 U.S. Gallons (30 Liters)
FUEL TANK CAPACITY:.....15 U.S. Gallons (57 Liters)
FUEL CONSUMPTION:.....Approx. .3 U.S. Gal/Hr (1.1 Liters/Hr)
DIMENSIONS:...H 37 1/2" (95 cm) x W 33 1/2" (85 cm) x L 50" (127 cm)
WEIGHT (Dry):..... 380lbs. (172 kg)

Since we are constantly striving to improve our products, specifications are subject to change without notice.

HYDRA-TECH PUMPS, INC
P.O. Box 537, Mt. Holly, NJ 08060, USA Phone: 609-267-5393 FAX: 609-261-8070
Website: www.hydra-tech.com E-Mail: htpump@hydra-tech .com